SPECIFICATION APPLIED

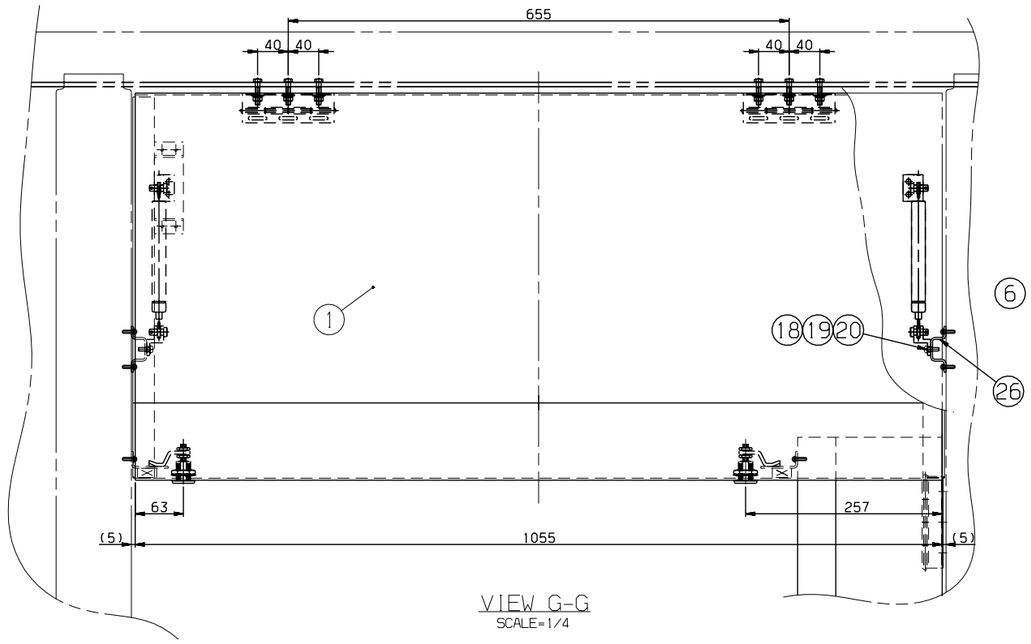

VIEW G-G
SCALE=1/4

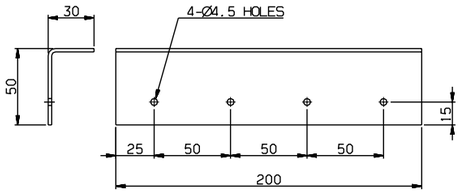

△ DETAIL #32
SCALE=1/2

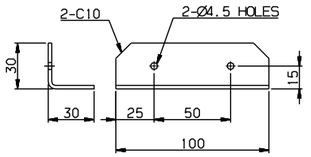

△ DETAIL #33
SCALE=1/2

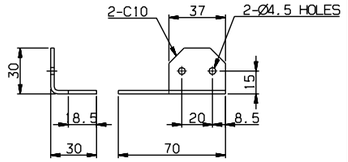

△ DETAIL #34
SCALE=1/2

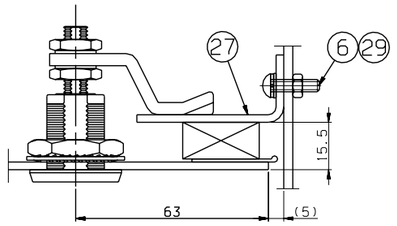

SECTION J-J
SCALE=1/1

NOTE
1. THIS PART SHALL BE INSTALLED ACCORDING TO WARK CONDITION.
2. ALL OF SCREW SHALL APPLY THE "LOCTITE 222"

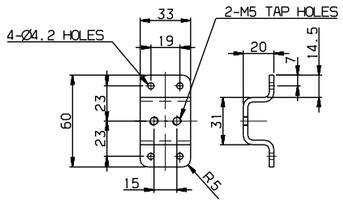

DETAIL #26
SCALE=1/2

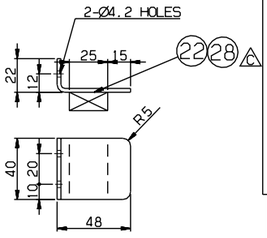

DETAIL #27
SCALE=1/2

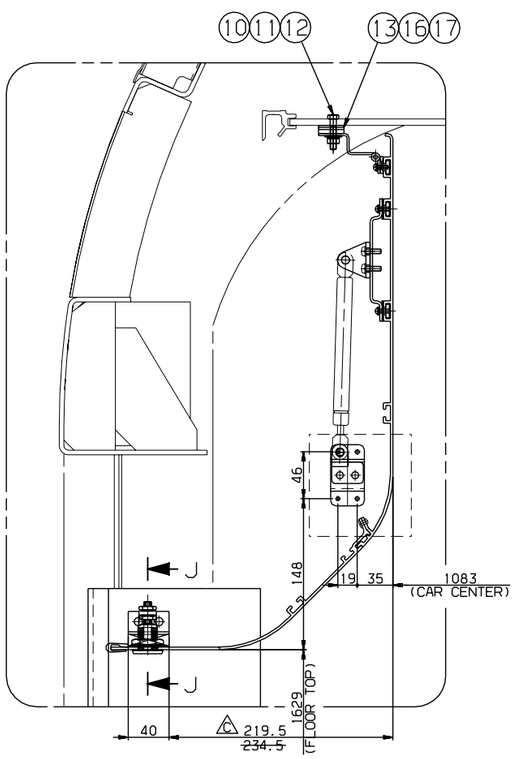

DETAIL E
SCALE=1/3

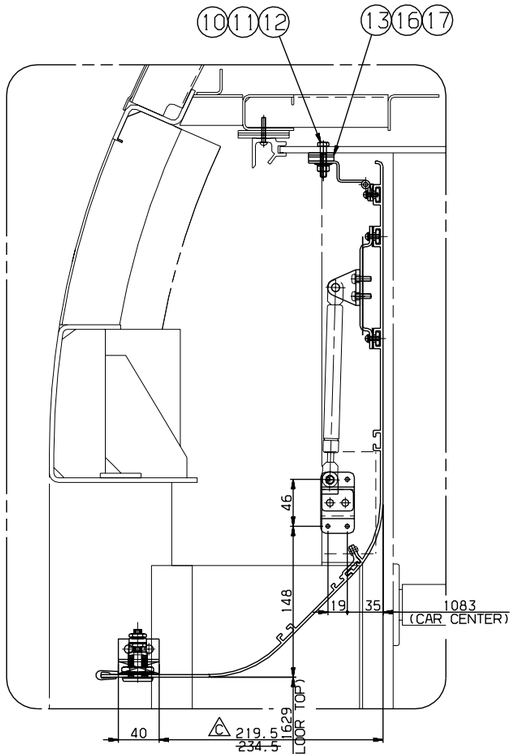

DETAIL F
SCALE=1/3

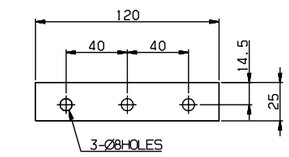

DETAIL #13, #16, #17
SCALE=1/2

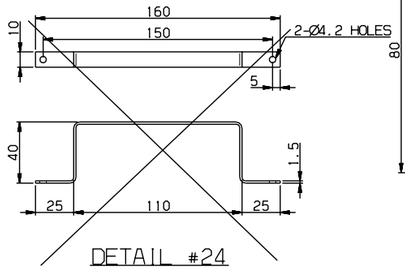

DETAIL #24
SCALE=1/2

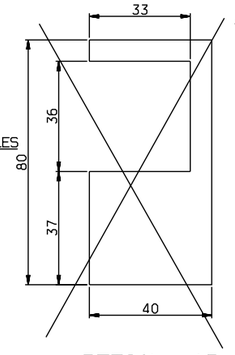

DETAIL #15
SCALE=1/1

NO.	PART NO.	DESCRIPTION	MATERIAL	Q'TY	V.T	REMARKS
38	RFP57001AN0-038	PACKING	SUS304	2		T3X30X200
37	RFP57001AN0-037	PACKING	SUS304	2		T3X30X70
36	RFP57001AN0-036	PACKING	SUS304	4		T3X30X100
35	RS60607-098S	SCREW,F.H	SUS304	18		M4X14
34	RFP57001AN0-034	BRACKET	SUS304	2		T2.3
33	RFP57001AN0-033	BRACKET	SUS304	4		T2.3
32	RFP57001AN0-032	BRACKET	SUS304	2		T2.3
31	RFP57029AN0	COVER	ASSY	1		
30	RFP57028AN0	COVER	ASSY	1		
29	RS60401-005S	NUT,HEX	SUS304	8 4		M4
28	RFP57001AN0-028	ADHESIVE	ASSY	SET		AR
27	RFP57001AN0-027	BRACKET	SUS304	4		T2.5
26	RFP57001AN0-026	BRACKET	SUS304	4		T3
25	RFP57024AN0	BRACKET	ASSY	3		
24	~~RFP57001AN0-024~~	~~SUPPORT, WIRE~~	~~SUS304~~	~~2~~		
23	RFA50004AN0	SUPPORT, WIRE	SUS304	4		
22	RFP57001AN0-022	PACKING	NEOPRENE RUBBER	4		T12X40X25
21	RFP57001AN0-021	PACKING	NEOPRENE RUBBER	6		T4X120X30
20	RS60801-005S	WASHER,SPRING	SUS304	8		M5
19	RS60807-008S	WASHER,PLAIN	SUS304	8		M5
18	RS60601-070S	SCREW,R.H	SUS304	8		M5X16
17	RFP57001AN0-017	PACKING	NEOPRENE RUBBER HARD BOARD	4		T2
16	RFP57001AN0-016	PACKING	NEOPRENE RUBBER HARD BOARD	4		T1
15	~~RFP57001AN0-015~~	~~PACKING~~	~~NEOPRENE RUBBER~~	~~6~~		~~T2X20X40,P112 HOLE~~
14	~~RS60601-067S~~	~~SCREW,R.H~~	~~SUS304~~	~~8~~		~~M4X12~~
13	RFP57001AN0-013	PACKING	NEOPRENE RUBBER HARD BOARD	4		T5
12	RS60810-001S	WASHER,PLAIN,SQUARE	SUS304	12		M6
11	RS60401-007S	NUT,HEX	SUS304	12		M6
10	RS60801-006S	WASHER,SPRING	SUS304	12		M6
9	RS60807-004S	WASHER,PLAIN	SUS304	58 42		M4
8	RS60801-004S	WASHER,SPRING	SUS304	58 42		M4
7	RS60610-071S	SCREW,R.H	SUS304	18 28		M4X20
6	RS60610-067S	SCREW,R.H	SUS304	60 32		M4X16 ~~M4X12~~
5	RFP57004AN0	BRACKET	ASSY	3		
4	RFP57011AN0	COVER,INSPECTION STABILIZER	ASSY	1		
3	RFP57003AN0	COVER,INSPECTION STABILIZER	ASSY	1		
2	RFP57010AN0	COVER,INSPECTION	ASSY	1		
1	RFP57002AN0	COVER,INSPECTION	ASSY	1		

기능 MARK	일자 DATE	내용 DETAIL OF REVISION(E.C ZONE)	설변번호 E.C NO.	설계 DGN	검도 CHK	승인 APP
CX17	2010.02.08	ADDED SECTION & VIEW CHANGED DIMENSION.	3D5101-U090	Y.D.KIM	H.S.KIM	H.G.RYU
BX4	2009.07.15	DELETE PART NO.14/CHANGED PART NO.6,7.	3D5101-U060	Y.D.KIM	H.S.KIM	H.G.RYU
AX12	2009.02.23	CHANGED DRW/ADDED NOTE 2.	3D5101-U033	Y.D.KIM	H.S.KIM	H.G.RYU

승인 APP	검도 CHK	설계 DGN	제도 DRG
H.G.RYU 2008.10.10	H.S.KIM 2008.10.10	Y.D.KIM 2008.10.10	S.H.SONG 2008.10.10

재질 MAT'L
중량 G.W
일반공차 MC | MD | CT
B | B | B
SIZE A1

명칭 TITLE: COVER, VESTIBULE INSPECTION FITTING(2/2)
도면번호 DRG. NO: RFP57001AN0 Ver. 00 Rev. -C
SCALE 1/10
SHEET 2 of 2

HYUNDAI Rotem 현대로템주식회사

참고문헌 REF. NO. FPP10229

3D5101 | RFP- | 년-PRJT | 심리번호

본 도면은 당사 재산권과 기밀에 관한 사항으로 무단복사/배포 금지됨. PROPERTY OF ISSUING ENTITY. CANNOT BE DISTRIBUTED OR REPRODUCED WITHOUT AUTHORIZATION.

CATIA

일반공차 GENERAL TOLERANCE			
치수 DIM	~ 6	0.1	0.2
	~ 30	0.2	0.5
	~ 120	0.3	0.8
	~ 315	0.5	1.2
	~ 1000	0.8	2.0
	~ 2000	1.2	3.0
	~ 4000	2.0	4.0
틈새 CLEARANCE		A	B
용접 구조물 WELDING	~ 6	1.5	2.5
	~ 30	2.0	3.0
	~ 120	3.0	4.0
	~ 315	4.0	5.0
	~ 1000	5.0	7.0
	~ 2000	6.0	8.0
	~ 4000	8.0	10.0
주조 CASTING	~ 6	0.5	1
	~ 30	1	1.5
	~ 120	1.5	2
	~ 315	2	3
	~ 1000	3	4
	~ 2000	4	5
	~ 3150	-	7
틈새 CLEARANCE		A	B
절삭 MACHINING	~ 6	0.1	0.2
	~ 30	0.2	0.5
	~ 120	0.3	0.8
	~ 315	0.5	1.2
	~ 1000	0.8	2.0
	~ 2000	1.2	3.0
	~ 4000	2.0	4.0
틈새 CLEARANCE		A	B
주조 CASTING	~ 6	1.5	2.5
	~ 30	2.0	3.0
	~ 120	3.0	4.0
	~ 315	4.0	5.0
	~ 1000	5.0	7.0
	~ 2000	6.0	8.0
	~ 4000	8.0	10.0
틈새 CLEARANCE		A	B	C
용접 구조물 WELDING	~ 20M	6	14	24
	~ 15M	7	12	21
	~ 12M	6	10	18
	~ 8M	5	8	14
	~ 4M	4	6	11
	~ 2M	3	4	8
	~ 1M	2	3	6
	~ 315	1	2	4
	~ 120	1	2	3
	~ 30	1	1	1
틈새 CLEARANCE		A	B	C
용접 구조물 WELDING	~ 20M	-	6.0	8.0
	~ 15M	-	5.0	7.0
	~ 12M	-	4.0	6.0
	~ 8M	-	3.0	5.0
	~ 4M	0.8	2.0	4.0
	~ 2M	0.5	1.2	3.0
	~ 1M	0.3	0.8	2.0
	~ 315	0.2	0.5	1.2
	~ 120	0.15	0.3	0.8
	~ 30	0.1	0.2	0.5
	1~6	0.05	0.1	0.2
틈새 CLEARANCE		A	B	C
가공 MACHINING				